MODE MANUFACTURING

RDS / LED Retrofit

The LED backlit retrofit kit was designed to open up the room and distribute light spaciously along both the vertical and horizontal work planes. This retrofit kit is an excellent alternative to standard retrofit designs and is ideally suited for commercial recessed grid, suspended or surface mount troffers.

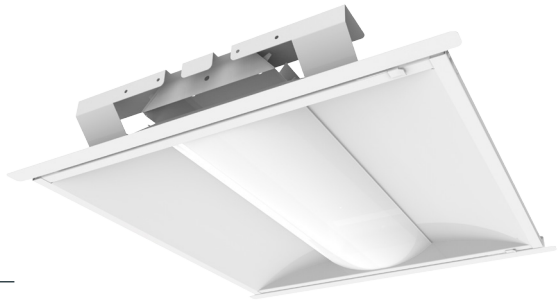

Project Name: _____ Type: _____

Catalog Number: _____ Date: _____

SPECIFICATIONS

Features

- Available in 2' and 4' lengths
- Many lumen packages are available to choose from
- CCT options available
- Fits most standard 2x2 and 2x4 troffer luminaires
- Swing door allows for easy installation and maintenance
- Consistent look with FDS, FWW and FNW which promotes a consistent look throughout the building

Construction

- Matte white painted aluminum door frame
- Rust free
- Light weight
- Installer friendly

Electrical

- 120-277 VAC universal voltage standard
- Power Factor > .9 & THD < 20% @277 VAC on DLC listed models
- 0-10V dimming standard
- Name brand drivers
- Ambient Operating Range: -20˚C to 45˚C (-4˚F to 113˚F)
- TM-21 Reported Lumen Maintenance (L70) of >60k hrs, and Projected Lumen Maintenance of 148k hrs

Optics

- Name brand LED arrays
- High efficiency LEDs
- CRI > 80 on DLC listed models; high color rendering
- LED panels made premium 98% reflective aluminum
- Frosted lens hides LED pixelation
- Volumetric distribution for even illumination

Warranty

- 5-year limited warranty
- Project specific warranty terms available

Options

Consult with your sales representative for additional options

CERTIFICATIONS

DLC QPL LISTED · c UL LISTED · IC RATED

ORDERING INFORMATION

TYPE	DIMENSIONS†	LUMEN PACKAGE^	CCT^^
RDS	**2** 2 x 2 **4** 2 x 4	**20** 2,000L **25** 2,500L **50** 5,000L *In 250 lumen increments. See tables on pgs 4-6	**30** 3,000K **35** 3,500K **40** 4,000K **50** 5,000K *Not available in all configurations. See tables on pgs 4-6
RDS			

–

ADDITIONAL OPTIONS:

VOLTAGE	BACKUP	PACKAGING	GEN
Blank 120/277v	**E** Backup Emergency Driver *Specify backup on page 2	**DP** Distributor Pack **CP** Contractor Pack	**02**
			-02

Example Ordering Number: **RDS2030-E(PS01)CP-02**

Contact your sales rep for specifics.

^2x2 from 2,000 to 4,000 in 250 lumen increments
^2x4 from 3,000 to 5,000 in 250 lumen increments
†Custom 1x4 options are available.
^^4,000L not available in 3000K
^^5,000L not available in 3000K

MODE MANUFACTURING

RDS / LED Troffer

ADDITIONAL INFORMATION

Emergency Backup Options:

CODE	FEATURES
PS01	PowerSentry PS1060 120-277v

MODE MANUFACTURING

RDS / LED Retrofit

PHOTOMETRIC DATA

Below is the photometric data information for a 2 x 2 fixture.

Zonal lumen summary

ZONE	LUMENS	% OF FIXTURE
0-30	509	25.5
0-40	847	42.4
0-60	1536	76.8
0-90	1999	100.0
90-120	0	0.0
90-150	1	0.0
90-180	1	0.0
0-180	2000	100.0

LED lighting facts® A Program of the U.S. DOE

Light Output (Lumens)	1900
Watts	20.5
Lumens per Watt (Efficacy)	92.68
Color Accuracy *Color Rendering Index (CRI)*	81

Light Color Correlated Color Temperature (CCT) **3000 (Bright White)**

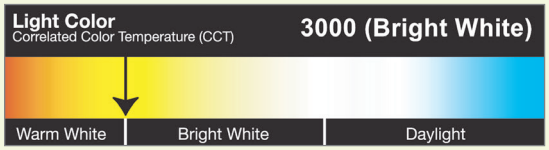

All results are according to IESNA LM-79-2008: *Approved Method for the Electrical and Photometric Testing of Solid-State Lighting.* The U.S. Department of Energy (DOE) verifies product test data and results.

Visit www.lightingfacts.com for the Label Reference Guide.
Registration Number: 61VT-QWRYY5 (11/3/2016)
Model Number: RDS22030-02
Type: Luminaire - Troffer/Grid Ceiling

Polar plot

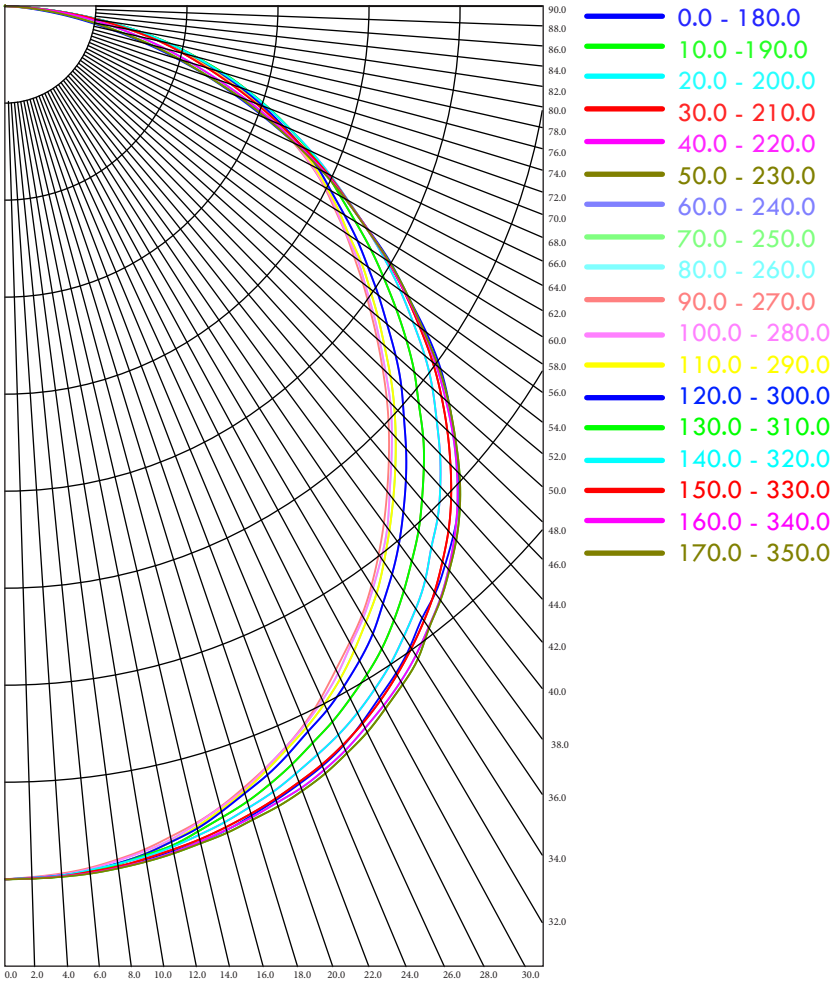

MODE MANUFACTURING

RDS / LED Retrofit

PHOTOMETRIC DATA

Below is the photometric data information for a 2 x 4 fixture.

Zonal lumen summary

ZONE	LUMENS	% OF FIXTURE
0-30	889	25.5
0-40	1477	42.4
0-60	2679	76.8
0-90	3487	100.0
90-120	0	0.0
90-150	1	0.0
90-180	1	0.0
0-180	3488	100.0
TOTAL LUMINAIRE OPTICAL EFFICIENCY = NA		

LED lighting facts® A Program of the U.S. DOE

Light Output (Lumens)	3000
Watts	25.5
Lumens per Watt (Efficacy)	117.65
Color Accuracy *Color Rendering Index (CRI)*	81

Light Color Correlated Color Temperature (CCT) **5000 (Daylight)**

All results are according to IESNA LM-79-2008: *Approved Method for the Electrical and Photometric Testing of Solid-State Lighting.* The U.S. Department of Energy (DOE) verifies product test data and results.

Visit www.lightingfacts.com for the Label Reference Guide.
Registration Number: 61VT-SIAM5V (11/3/2016)
Model Number: RDS43050-02
Type: Luminaire - Troffer/Grid Ceiling

Polar plot

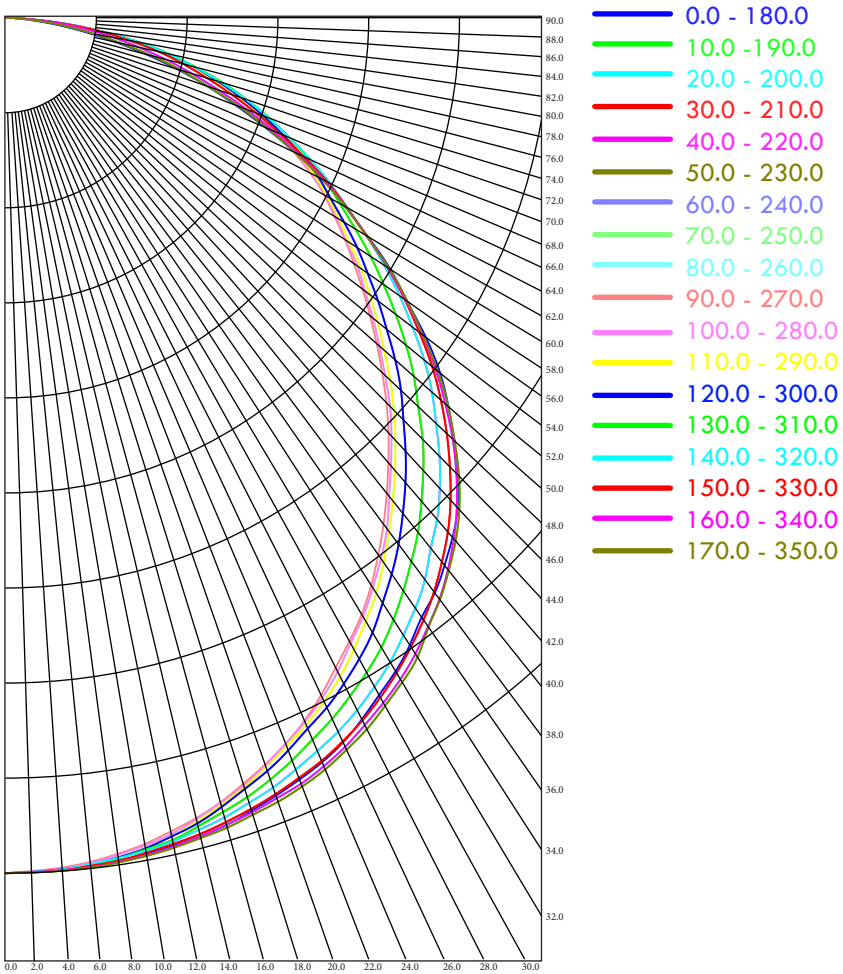

MODE MANUFACTURING

RDS / LED Retrofit

SCALED PERFORMANCE TABLE

Part #	Dimensions	Initial Light Output (lumens)	Input Power (W)	Luminaire Efficacy (lm/w)	CCT	DLC v4.1 Tier
RDS12030-[blank,E,DP,CP]-02	1x4	2000	19.40	103.09	3000	Standard
RDS12035-[blank,E,DP,CP]-02	1x4	2000	19.10	104.71	3500	Standard
RDS12040-[blank,E,DP,CP]-02	1x4	2000	18.50	108.11	4000	Standard
RDS12050-[blank,E,DP,CP]-02	1x4	2000	18.50	108.11	5000	Standard
RDS12230-[blank,E,DP,CP]-02	1x4	2250	22.20	101.35	3000	Standard
RDS12235-[blank,E,DP,CP]-02	1x4	2250	21.80	103.21	3500	Standard
RDS12240-[blank,E,DP,CP]-02	1x4	2250	21.00	107.14	4000	Standard
RDS12250-[blank,E,DP,CP]-02	1x4	2250	21.00	107.14	5000	Standard
RDS12530-[blank,E,DP,CP]-02	1x4	2500	25.00	100.00	3000	Standard
RDS12535-[blank,E,DP,CP]-02	1x4	2500	24.60	101.63	3500	Standard
RDS12540-[blank,E,DP,CP]-02	1x4	2500	23.70	105.49	4000	Standard
RDS12550-[blank,E,DP,CP]-02	1x4	2500	23.70	105.49	5000	Standard
RDS12730-[blank,E,DP,CP]-02	1x4	2750	27.90	98.57	3000	Standard
RDS12735-[blank,E,DP,CP]-02	1x4	2750	27.40	100.36	3500	Standard
RDS12740-[blank,E,DP,CP]-02	1x4	2750	26.40	104.17	4000	Standard
RDS12750-[blank,E,DP,CP]-02	1x4	2750	26.40	104.17	5000	Standard
RDS13030-[blank,E,DP,CP]-02	1x4	3000	30.80	97.40	3000	Standard
RDS13035-[blank,E,DP,CP]-02	1x4	3000	30.30	99.01	3500	Standard
RDS13040-[blank,E,DP,CP]-02	1x4	3000	29.20	102.74	4000	Standard
RDS13050-[blank,E,DP,CP]-02	1x4	3000	29.20	102.74	5000	Standard
RDS13230-[blank,E,DP,CP]-02	1x4	3250	31.00	104.84	3000	Standard
RDS13235-[blank,E,DP,CP]-02	1x4	3250	33.20	97.89	3500	Standard
RDS13240-[blank,E,DP,CP]-02	1x4	3250	32.10	101.25	4000	Standard
RDS13250-[blank,E,DP,CP]-02	1x4	3250	32.10	101.25	5000	Standard
RDS13530-[blank,E,DP,CP]-02	1x4	3500	33.50	104.48	3000	Standard
RDS13535-[blank,E,DP,CP]-02	1x4	3500	33.00	106.06	3500	Standard
RDS13540-[blank,E,DP,CP]-02	1x4	3500	35.00	100.00	4000	Standard
RDS13550-[blank,E,DP,CP]-02	1x4	3500	35.00	100.00	5000	Standard
RDS22030-[blank,E,DP,CP]-02	2x2	2000	20.50	97.56	3000	Standard
RDS22035-[blank,E,DP,CP]-02	2x2	2000	20.10	99.50	3500	Standard
RDS22040-[blank,E,DP,CP]-02	2x2	2000	19.40	103.09	4000	Standard
RDS22050-[blank,E,DP,CP]-02	2x2	2000	19.40	103.09	5000	Standard
RDS22230-[blank,E,DP,CP]-02	2x2	2250	21.00	107.14	3000	Standard
RDS22235-[blank,E,DP,CP]-02	2x2	2250	20.60	109.22	3500	Standard
RDS22240-[blank,E,DP,CP]-02	2x2	2250	22.40	100.45	4000	Standard
RDS22250-[blank,E,DP,CP]-02	2x2	2250	22.40	100.45	5000	Standard
RDS22530-[blank,E,DP,CP]-02	2x2	2500	23.60	105.93	3000	Standard

MODE MANUFACTURING

RDS / LED Retrofit

SCALED PERFORMANCE TABLE

RDS22535-[blank,E,DP,CP]-02	2x2	2500	23.20	107.76	3500	Standard
RDS22540-[blank,E,DP,CP]-02	2x2	2500	25.50	98.04	4000	Standard
RDS22550-[blank,E,DP,CP]-02	2x2	2500	25.50	98.04	5000	Standard
RDS22730-[blank,E,DP,CP]-02	2x2	2750	26.30	104.56	3000	Standard
RDS22735-[blank,E,DP,CP]-02	2x2	2750	25.90	106.18	3500	Standard
RDS22740-[blank,E,DP,CP]-02	2x2	2750	25.00	110.00	4000	Standard
RDS22750-[blank,E,DP,CP]-02	2x2	2750	25.00	110.00	5000	Standard
RDS23030-[blank,E,DP,CP]-02	2x2	3000	29.10	103.09	3000	Standard
RDS23035-[blank,E,DP,CP]-02	2x2	3000	28.60	104.90	3500	Standard
RDS23040-[blank,E,DP,CP]-02	2x2	3000	27.60	108.70	4000	Standard
RDS23050-[blank,E,DP,CP]-02	2x2	3000	27.60	108.70	5000	Standard
RDS23230-[blank,E,DP,CP]-02	2x2	3250	32.00	101.56	3000	Standard
RDS23235-[blank,E,DP,CP]-02	2x2	3250	31.40	103.50	3500	Standard
RDS23240-[blank,E,DP,CP]-02	2x2	3250	30.30	107.26	4000	Standard
RDS23250-[blank,E,DP,CP]-02	2x2	3250	30.30	107.26	5000	Standard
RDS23530-[blank,E,DP,CP]-02	2x2	3500	34.90	100.29	3000	Standard
RDS23535-[blank,E,DP,CP]-02	2x2	3500	34.30	102.04	3500	Standard
RDS23540-[blank,E,DP,CP]-02	2x2	3500	33.00	106.06	4000	Standard
RDS23550-[blank,E,DP,CP]-02	2x2	3500	33.00	106.06	5000	Standard
RDS23730-[blank,E,DP,CP]-02	2x2	3750	37.90	98.94	3000	Standard
RDS23735-[blank,E,DP,CP]-02	2x2	3750	37.20	100.81	3500	Standard
RDS23740-[blank,E,DP,CP]-02	2x2	3750	35.80	104.75	4000	Standard
RDS23750-[blank,E,DP,CP]-02	2x2	3750	35.80	104.75	5000	Standard
RDS24030-[blank,E,DP,CP]-02	2x2	4000	41.00	97.56	3000	Standard
RDS24035-[blank,E,DP,CP]-02	2x2	4000	40.20	99.50	3500	Standard
RDS24040-[blank,E,DP,CP]-02	2x2	4000	38.70	103.36	4000	Standard
RDS24050-[blank,E,DP,CP]-02	2x2	4000	38.70	103.36	5000	Standard
RDS43030-[blank,E,DP,CP]-02	2x4	3000	26.00	115.38	3000	Standard
RDS43035-[blank,E,DP,CP]-02	2x4	3000	25.50	117.65	3500	Standard
RDS43040-[blank,E,DP,CP]-02	2x4	3000	24.70	121.46	4000	Premium
RDS43050-[blank,E,DP,CP]-02	2x4	3000	24.70	121.46	5000	Premium
RDS43230-[blank,E,DP,CP]-02	2x4	3250	28.50	114.04	3000	Standard
RDS43235-[blank,E,DP,CP]-02	2x4	3250	28.00	116.07	3500	Standard
RDS43240-[blank,E,DP,CP]-02	2x4	3250	27.00	120.37	4000	Standard
RDS43250-[blank,E,DP,CP]-02	2x4	3250	27.00	120.37	5000	Standard
RDS43530-[blank,E,DP,CP]-02	2x4	3500	31.10	112.54	3000	Standard
RDS43535-[blank,E,DP,CP]-02	2x4	3500	30.50	114.75	3500	Standard
RDS43540-[blank,E,DP,CP]-02	2x4	3500	29.50	118.64	4000	Standard
RDS43550-[blank,E,DP,CP]-02	2x4	3500	29.50	118.64	5000	Standard
RDS43730-[blank,E,DP,CP]-02	2x4	3750	33.70	111.28	3000	Standard
RDS43735-[blank,E,DP,CP]-02	2x4	3750	33.10	113.29	3500	Standard

MODE MANUFACTURING

RDS / LED Retrofit

SCALED PERFORMANCE TABLE

RDS43740-[blank,E,DP,CP]-02	2x4	3750	31.90	117.55	4000	Standard
RDS43750-[blank,E,DP,CP]-02	2x4	3750	31.90	117.55	5000	Standard
RDS44030-[blank,E,DP,CP]-02	2x4	4000	36.40	109.89	3000	Standard
RDS44035-[blank,E,DP,CP]-02	2x4	4000	35.80	111.73	3500	Standard
RDS44040-[blank,E,DP,CP]-02	2x4	4000	34.50	115.94	4000	Standard
RDS44050-[blank,E,DP,CP]-02	2x4	4000	34.50	115.94	5000	Standard
RDS44230-[blank,E,DP,CP]-02	2x4	4250	39.20	108.42	3000	Standard
RDS44235-[blank,E,DP,CP]-02	2x4	4250	38.50	110.39	3500	Standard
RDS44240-[blank,E,DP,CP]-02	2x4	4250	37.10	114.56	4000	Standard
RDS44250-[blank,E,DP,CP]-02	2x4	4250	37.10	114.56	5000	Standard
RDS44530-[blank,E,DP,CP]-02	2x4	4500	37.50	120.00	3000	Standard
RDS44535-[blank,E,DP,CP]-02	2x4	4500	36.90	121.95	3500	Premium
RDS44540-[blank,E,DP,CP]-02	2x4	4500	35.70	126.05	4000	Premium
RDS44550-[blank,E,DP,CP]-02	2x4	4500	35.70	126.05	5000	Premium
RDS44730-[blank,E,DP,CP]-02	2x4	4750	39.90	119.05	3000	Standard
RDS44735-[blank,E,DP,CP]-02	2x4	4750	39.20	121.17	3500	Standard
RDS44740-[blank,E,DP,CP]-02	2x4	4750	37.90	125.33	4000	Premium
RDS44750-[blank,E,DP,CP]-02	2x4	4750	37.90	125.33	5000	Premium
RDS45030-[blank,E,DP,CP]-02	2x4	5000	42.20	118.48	3000	Standard
RDS45035-[blank,E,DP,CP]-02	2x4	5000	41.50	120.48	3500	Standard
RDS45040-[blank,E,DP,CP]-02	2x4	5000	40.00	125.00	4000	Premium
RDS45050-[blank,E,DP,CP]-02	2x4	5000	40.00	125.00	5000	Premium

MODE MANUFACTURING

RDS / LED Retrofit

APPLICATION NOTES

Actual performance may vary by up to +/-10% of values listed. See IES file for actual values.

See DLC QPL for listed models. Model numbers will be listed under the manufacturer Energy Planning Associates.

FIXTURE DIMENSIONS

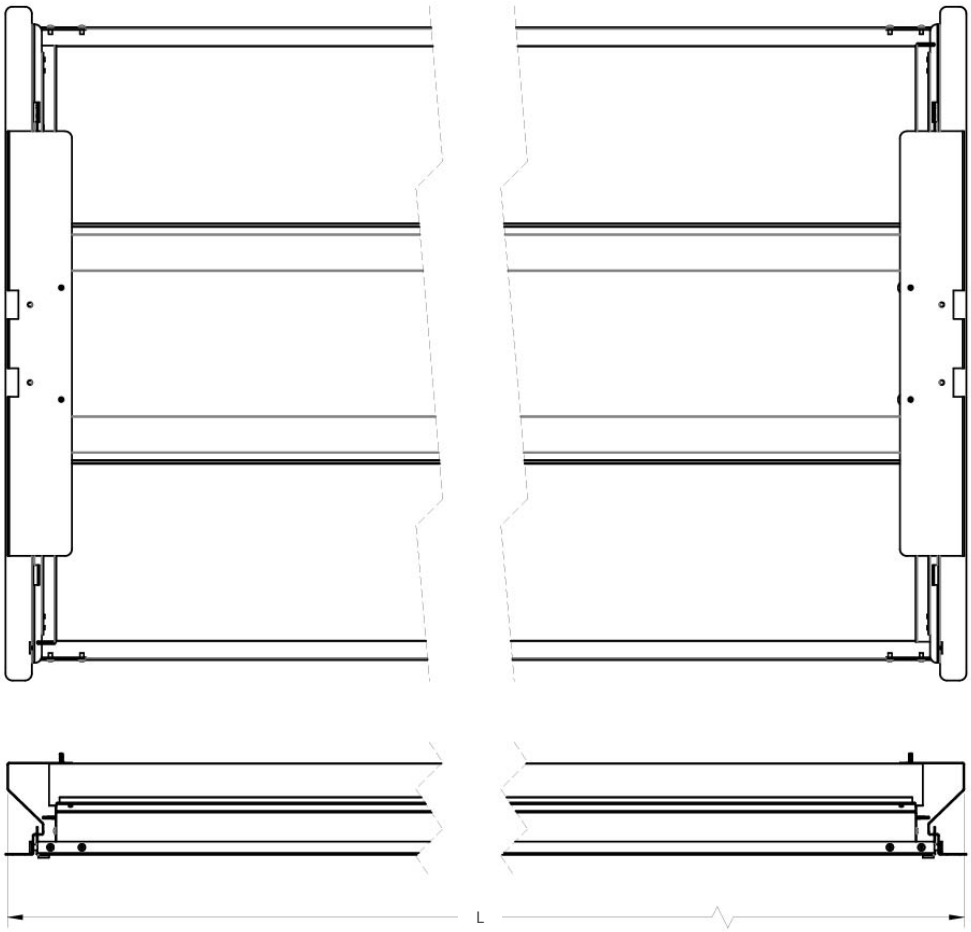

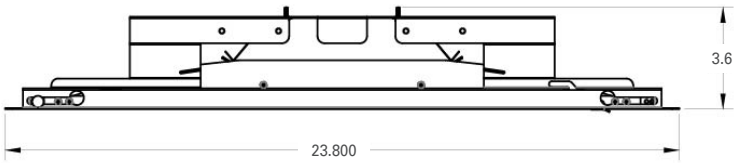

CONFIGURATION	DIMENSION	VALUE (INCHES)
RDS2	L	24
RDS4	L	48

MODE MANUFACTURING

RDS / LED Retrofit

ADDITIONAL PRODUCT IMAGES

Open 2x4 fixture visual